Technological University of the Philippines Visayas
**COLLEGE OF ENGINEERING**
Talisay City, Negros Occidental

# Hexadecimal to 7 Segment Decoder

A Project presented to the

**Computer Engineering Department**

of Technological University of the Philippines Visayas

In Partial Fulfillment

of the Requirements for the Subject

**Computer Programming 6**

**Tappa, Nestor Luis Jr. M.**

Technological University of the Philippines Visayas
**COLLEGE OF ENGINEERING**
Talisay City, Negros Occidental

# USER'S GUIDE

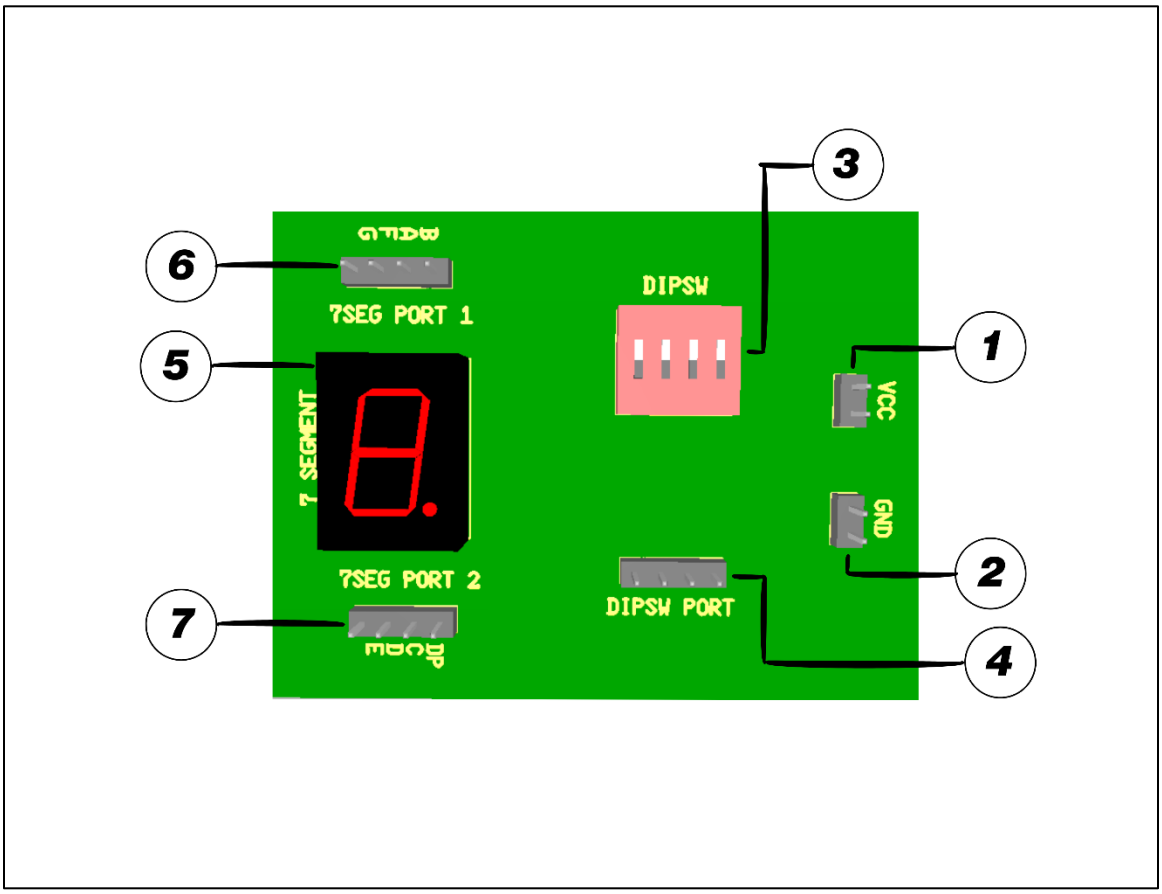


**LEGEND:**

1 – VCC Connection

2 – GND Connection

3 – Four Bit Dipswitch

4 – Four Bit Dipswitch Connection

5 – Seven Segment

6 – Seven Segment Connection 1

7 – Seven Segment Connection 2

# CONNECTOR PINOUTS

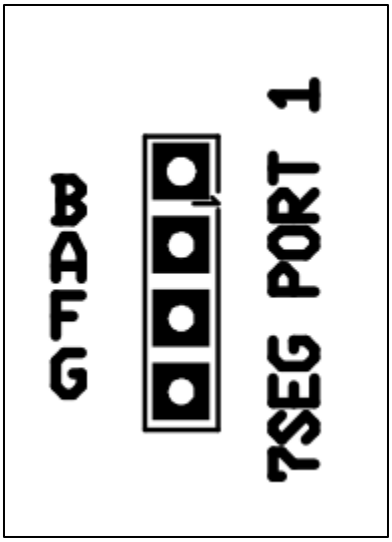


**PIN DESCRIPTION:**

B = Segment B
A = Segment A
F = Segment F
G = Segment G

* The 4-pin header (0.100" spacing) accepts 0.025" square pins.

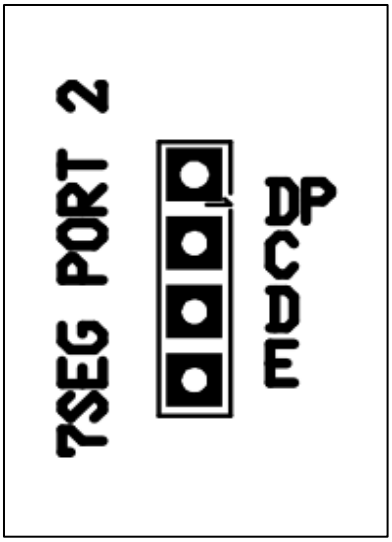


**PIN DESCRIPTION:**

DP = Segment Decimal Point
C = Segment C
D = Segment D
E = Segment E

* The 4-pin header (0.100" spacing) accepts 0.025" square pins.

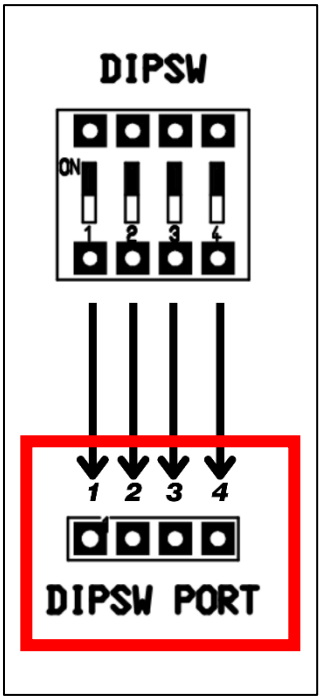


**PIN DESCRIPTION:**

1 = BIT 3 [MSB]
2 = BIT 2
3 = BIT 1
4 = BIT 0 [LSB]

* The 4-pin header (0.100" spacing) accepts 0.025" square pins.

# BASIC SYSTEM

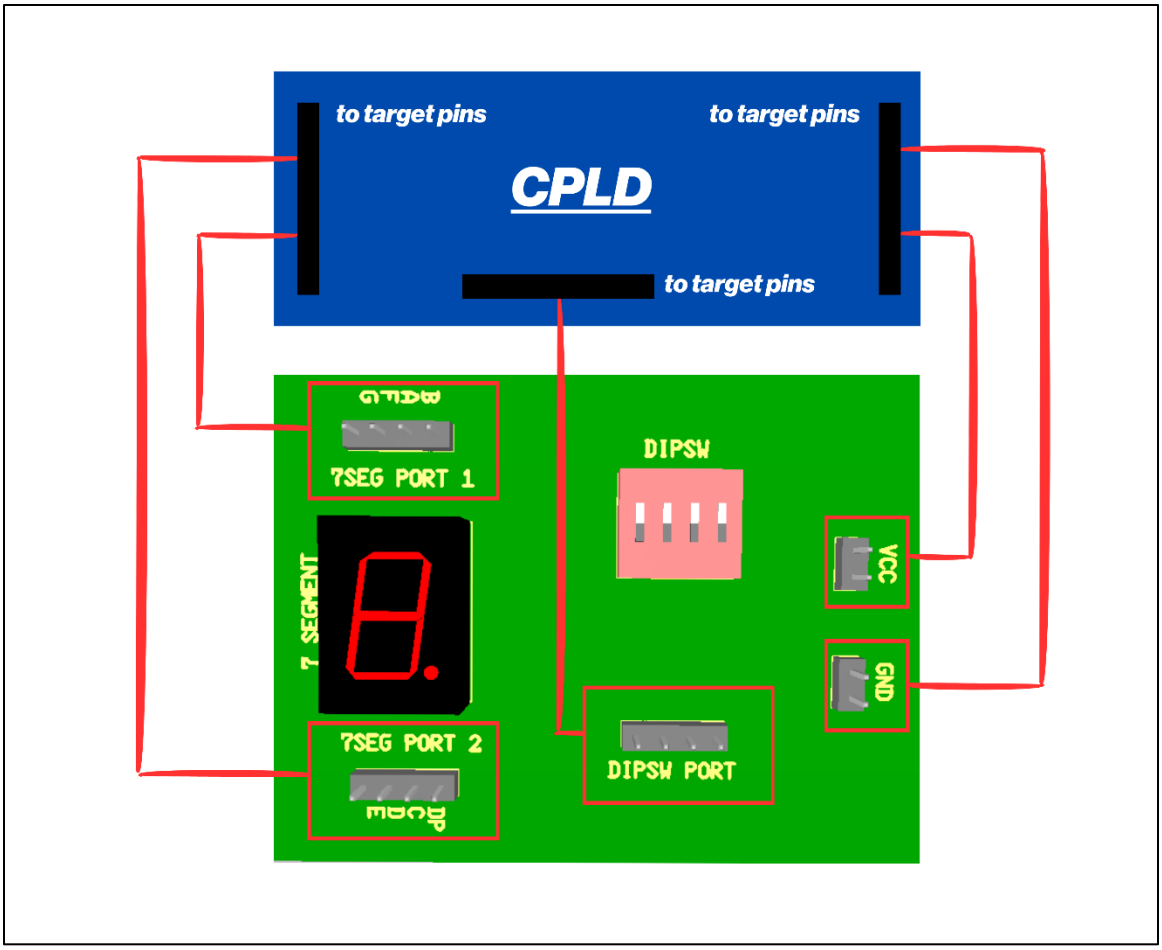

Technological University of the Philippines Visayas
**COLLEGE OF ENGINEERING**
Talisay City, Negros Occidental

# FUNCTIONALITY

| INPUT (DIPSW) | | OUTPUT (7 SEGMENT) | |
|---|---|---|---|
| input [3:0] | Dipswitch Positions | a b c d e f | 7 Segment Display |
| 0000 | | 1111110 | |
| 0001 | | 0110000 | |
| 0010 | | 1101101 | |
| 0011 | | 1111001 | |
| 0100 | | 0110011 | |
| 0101 | | 1011011 | |
| 0110 | | 1011111 | |
| 0111 | | 1110000 | |
| 1000 | | 1111111 | |
| 1001 | | 1111011 | |
| 1010 | | 1110111 | |
| 1011 | | 0011111 | |

| | | | |
|---|---|---|---|
| 1100 | | 1001110 | |
| 1101 | | 0111101 | |
| 1110 | | 1001111 | |
| 1111 | | 1000111 | |

# MODELSIM SIMULATION

Test Bench

```
module DecoderTB();

        reg [3:0] in;
        wire [6:0] out;

        Decoder tb(in, out);

        initial begin
                $display("TIME\tIN\tOUT");
                $monitor("%0t\t%b\t%b",$time,in,out);

                in = 4'b0000;
                #2 in = 4'b0001;
                #2 in = 4'b0010;
                #2 in = 4'b0011;
                #2 in = 4'b0100;
                #2 in = 4'b0101;
                #2 in = 4'b0110;
                #2 in = 4'b0111;
                #2 in = 4'b1000;
                #2 in = 4'b1001;
                #2 in = 4'b1010;
                #2 in = 4'b1011;
                #2 in = 4'b1100;
                #2 in = 4'b1101;
                #2 in = 4'b1110;
                #2 in = 4'b1111;
                #2 $finish;

        end

endmodule
```

Simulation Transcript

```
VSIM 3> run
# TIME   IN      OUT
# 0      0000    1111110
# 2      0001    0110000
# 4      0010    1101101
# 6      0011    1111001
# 8      0100    0110011
# 10     0101    1011011
# 12     0110    1011111
# 14     0111    1110000
# 16     1000    1111111
# 18     1001    1111011
# 20     1010    1110111
# 22     1011    0011111
# 24     1100    1001110
# 26     1101    0111101
# 28     1110    1001111
# 30     1111    1000111
# ** Note: $finish    : C:/intelFPGA_lite/20.1/Decoder/Decoder.v(54)
#    Time: 32 ps  Iteration: 0  Instance: /DecoderTB
# 1
# Break in Module DecoderTB at C:/intelFPGA_lite/20.1/Decoder/Decoder.v line 54
```

Simulation Timing Diagram

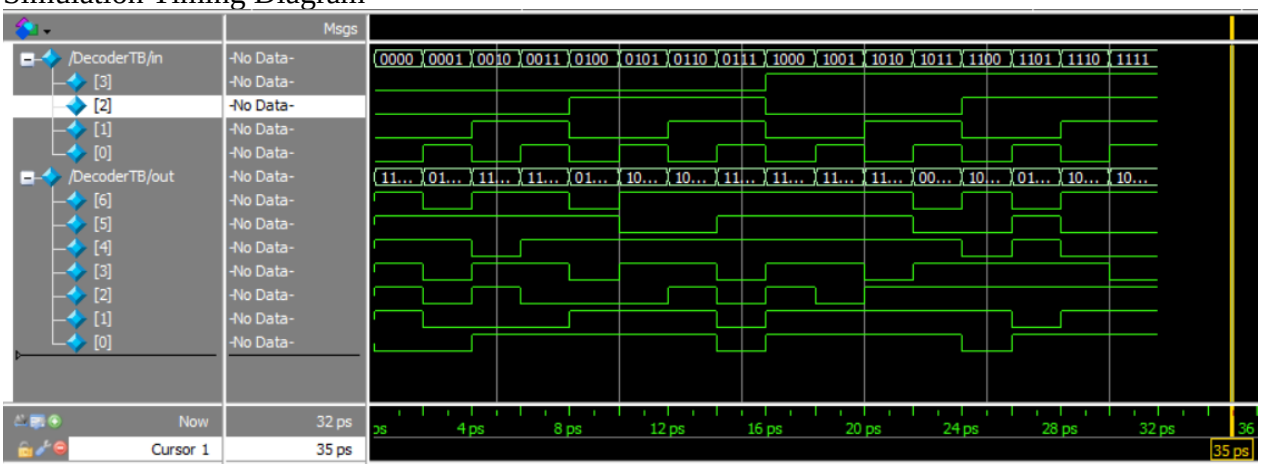

# QUARTUS

## Verilog Code

```
module Decoder(switch, seg);

   input [3:0] switch;
   output [6:0] seg;

      assign seg = (switch == 4'b0000) ? 7'b1111110 :  // 0
                   (switch == 4'b0001) ? 7'b0110000 :  // 1
                   (switch == 4'b0010) ? 7'b1101101 :  // 2
                   (switch == 4'b0011) ? 7'b1111001 :  // 3
                   (switch == 4'b0100) ? 7'b0110011 :  // 4
                   (switch == 4'b0101) ? 7'b1011011 :  // 5
                   (switch == 4'b0110) ? 7'b1011111 :  // 6
                   (switch == 4'b0111) ? 7'b1110000 :  // 7
                   (switch == 4'b1000) ? 7'b1111111 :  // 8
                   (switch == 4'b1001) ? 7'b1111011 :  // 9
                   (switch == 4'b1010) ? 7'b1110111 :  // A
                   (switch == 4'b1011) ? 7'b0011111 :  // b
                   (switch == 4'b1100) ? 7'b1001110 :  // C
                   (switch == 4'b1101) ? 7'b0111101 :  // d
                   (switch == 4'b1110) ? 7'b1001111 :  // E
                   (switch == 4'b1111) ? 7'b1000111 :  // F

                   7'b1111111;  // Default

endmodule
```

## Pin Planner

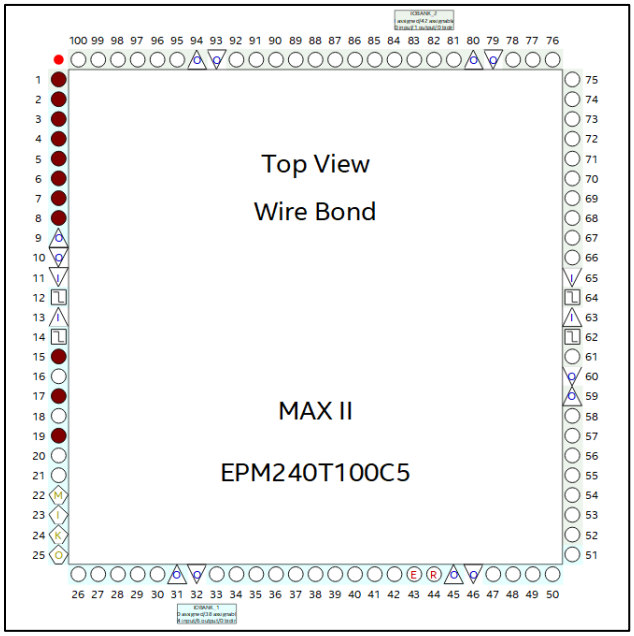


| Node Name | Direction | Location | I/O Bank | Fitter Location | I/O Standard | Reserved | Current Strength | Slew Rate Preservation |
|---|---|---|---|---|---|---|---|---|
| seg[6] | Output | PIN_19 | 1 | PIN_38 | 3.3-V ...fault) | | 16mA ...ault) | |
| seg[5] | Output | PIN_17 | 1 | PIN_33 | 3.3-V ...fault) | | 16mA ...ault) | |
| seg[4] | Output | PIN_15 | 1 | PIN_34 | 3.3-V ...fault) | | 16mA ...ault) | |
| seg[3] | Output | PIN_7 | 1 | PIN_20 | 3.3-V ...fault) | | 16mA ...ault) | |
| seg[2] | Output | PIN_5 | 1 | PIN_37 | 3.3-V ...fault) | | 16mA ...ault) | |
| seg[1] | Output | PIN_3 | 1 | PIN_40 | 3.3-V ...fault) | | 16mA ...ault) | |
| seg[0] | Output | PIN_1 | 2 | PIN_19 | 3.3-V ...fault) | | 16mA ...ault) | |
| switch[3] | Input | PIN_8 | 1 | PIN_36 | 3.3-V ...fault) | | 16mA ...ault) | |
| switch[2] | Input | PIN_6 | 1 | PIN_39 | 3.3-V ...fault) | | 16mA ...ault) | |
| switch[1] | Input | PIN_4 | 1 | PIN_18 | 3.3-V ...fault) | | 16mA ...ault) | |
| switch[0] | Input | PIN_2 | 1 | PIN_30 | 3.3-V ...fault) | | 16mA ...ault) | |
| <<new node>> | | | | | | | | |

Compilation Report

| | |
|---|---|
| Flow Status | Successful - Wed Nov 13 14:26:53 2024 |
| Quartus Prime Version | 20.1.0 Build 711 06/05/2020 SJ Lite Edition |
| Revision Name | Decoder |
| Top-level Entity Name | Decoder |
| Family | MAX II |
| Device | EPM240T100C5 |
| Timing Models | Final |
| Total logic elements | 7 / 240 ( 3 % ) |
| Total pins | 11 / 80 ( 14 % ) |
| Total virtual pins | 0 |
| UFM blocks | 0 / 1 ( 0 % ) |

Technological University of the Philippines Visayas
**COLLEGE OF ENGINEERING**
Talisay City, Negros Occidental

# PROJECT DOCUMENTATION
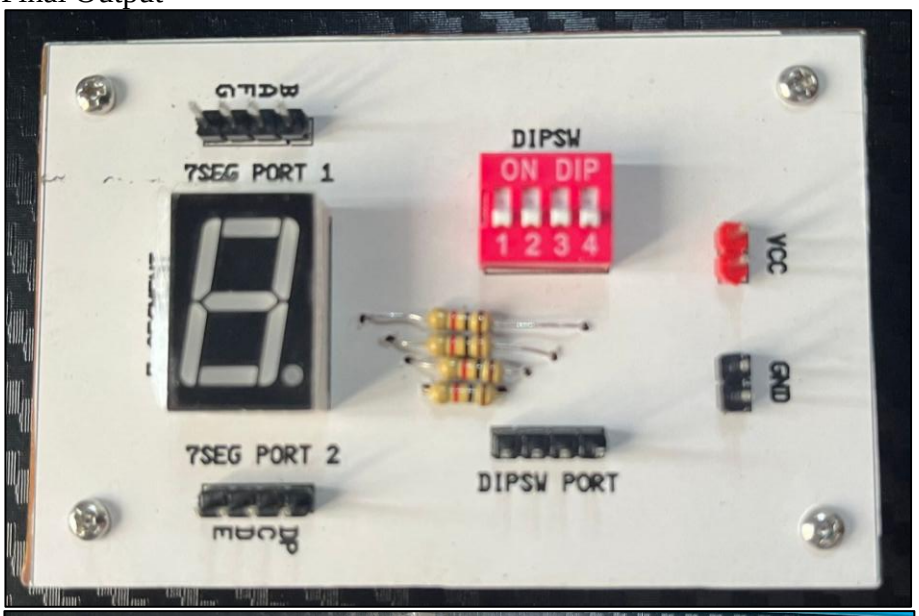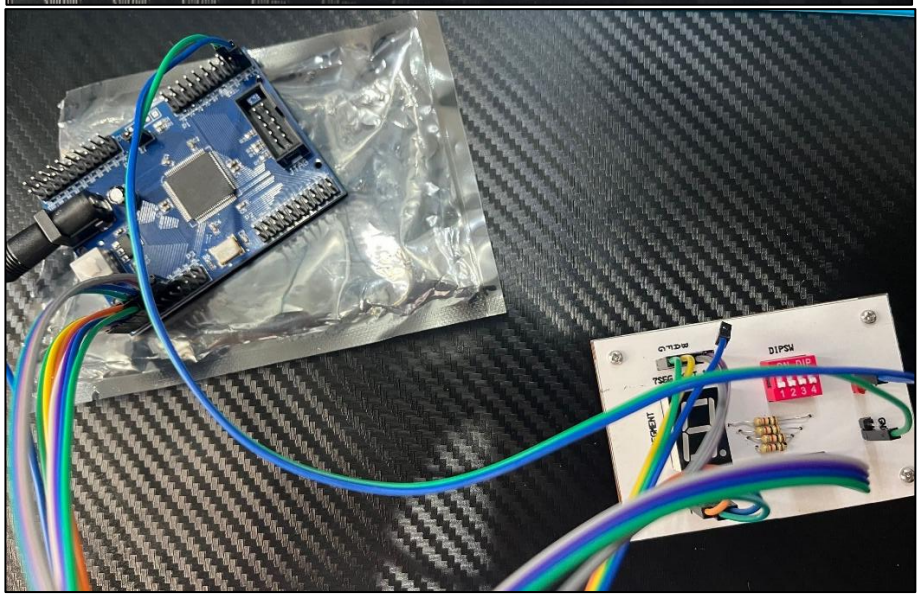
Final Output